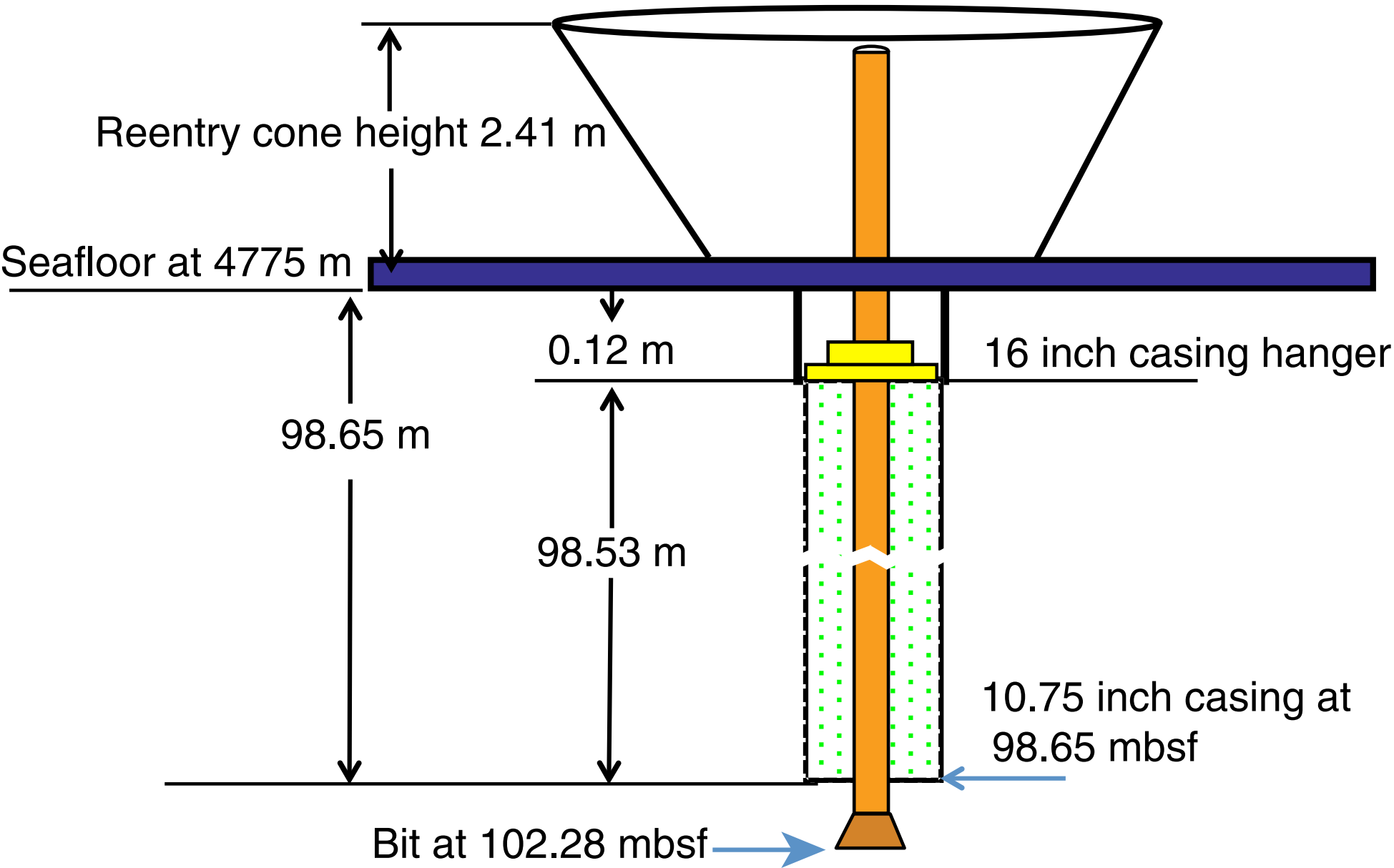Hole U1440B reentry system