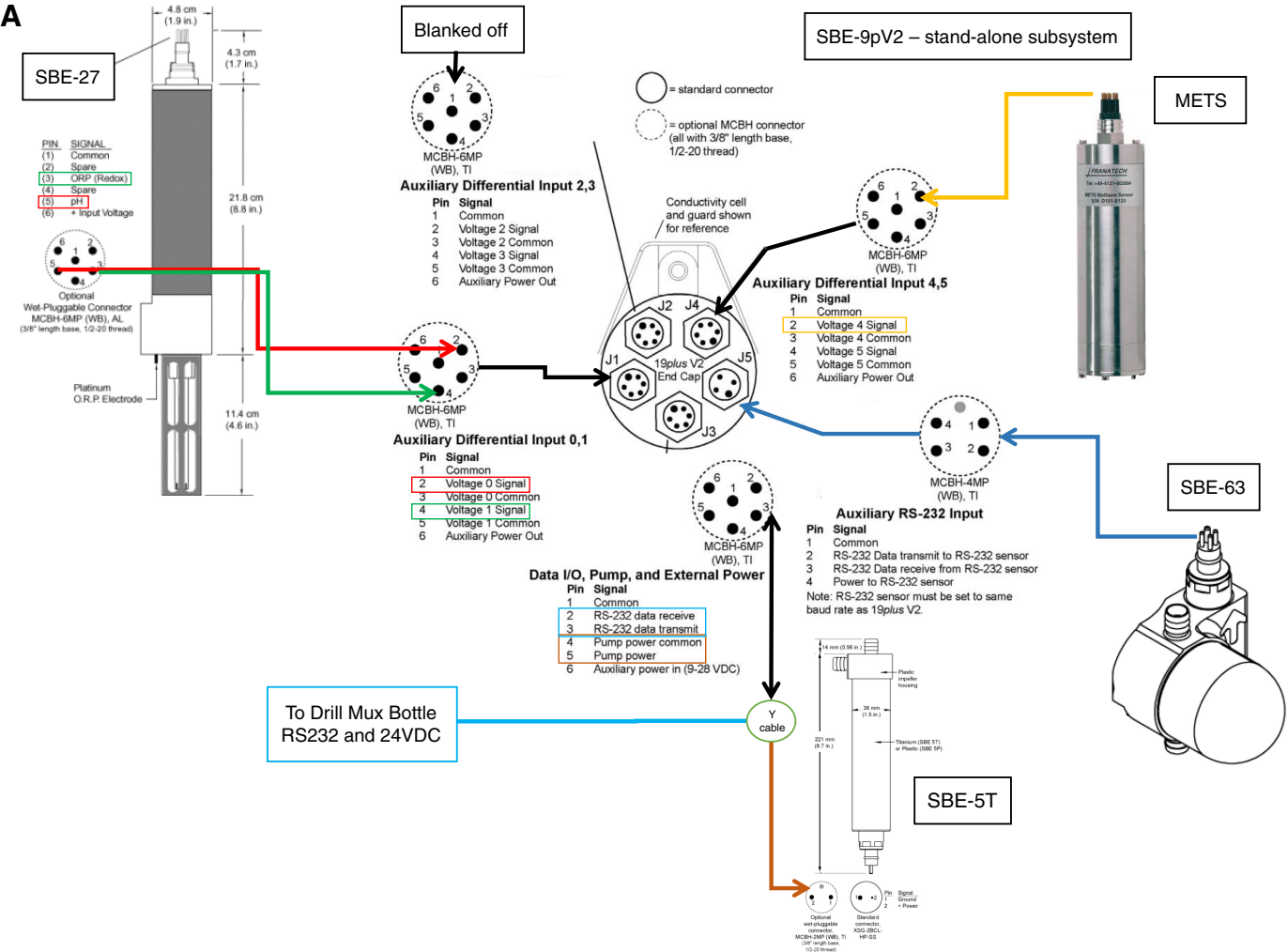
A
SBE-27
4.8 cm (1.9 in.)
4.3 cm (1.7 in.)
21.8 cm (8.8 in.)
11.4 cm (4.6 in.)
PIN SIGNAL
(1) Common
(2) Spare
(3) ORP (Redox)
(4) Spare
(5) pH
(6) + Input Voltage
Optional Wet-Pluggable Connector MCBH-6MP (WB), AL (3/8" length base, 1/2-20 thread)
Platinum O.R.P. Electrode
Blanked off
MCBH-6MP (WB), TI
Auxiliary Differential Input 2,3
Pin Signal
1 Common
2 Voltage 2 Signal
3 Voltage 2 Common
4 Voltage 3 Signal
5 Voltage 3 Common
6 Auxiliary Power Out
MCBH-6MP (WB), TI
Auxiliary Differential Input 0,1
Pin Signal
1 Common
2 Voltage 0 Signal
3 Voltage 0 Common
4 Voltage 1 Signal
5 Voltage 1 Common
6 Auxiliary Power Out
= standard connector
= optional MCBH connector (all with 3/8" length base, 1/2-20 thread)
Conductivity cell and guard shown for reference
J1
J2
J3
J4
J5
19plus V2 End Cap
SBE-9pV2 – stand-alone subsystem
METS
MCBH-6MP (WB), TI
Auxiliary Differential Input 4,5
Pin Signal
1 Common
2 Voltage 4 Signal
3 Voltage 4 Common
4 Voltage 5 Signal
5 Voltage 5 Common
6 Auxiliary Power Out
MCBH-4MP (WB), TI
SBE-63
MCBH-6MP (WB), TI
Data I/O, Pump, and External Power
Pin Signal
1 Common
2 RS-232 data receive
3 RS-232 data transmit
4 Pump power common
5 Pump power
6 Auxiliary power in (9-28 VDC)
Auxiliary RS-232 Input
Pin Signal
1 Common
2 RS-232 Data transmit to RS-232 sensor
3 RS-232 Data receive from RS-232 sensor
4 Power to RS-232 sensor
Note: RS-232 sensor must be set to same baud rate as 19plus V2.
To Drill Mux Bottle RS232 and 24VDC
Y cable
SBE-5T
Optional wet-pluggable connector, MCBH-2MP (WB), TI (3/8" length base, 1/2-20 thread)
Standard connector, XSG-2BCL-HP-SS
Pin Signal
1 Ground
2 + Power