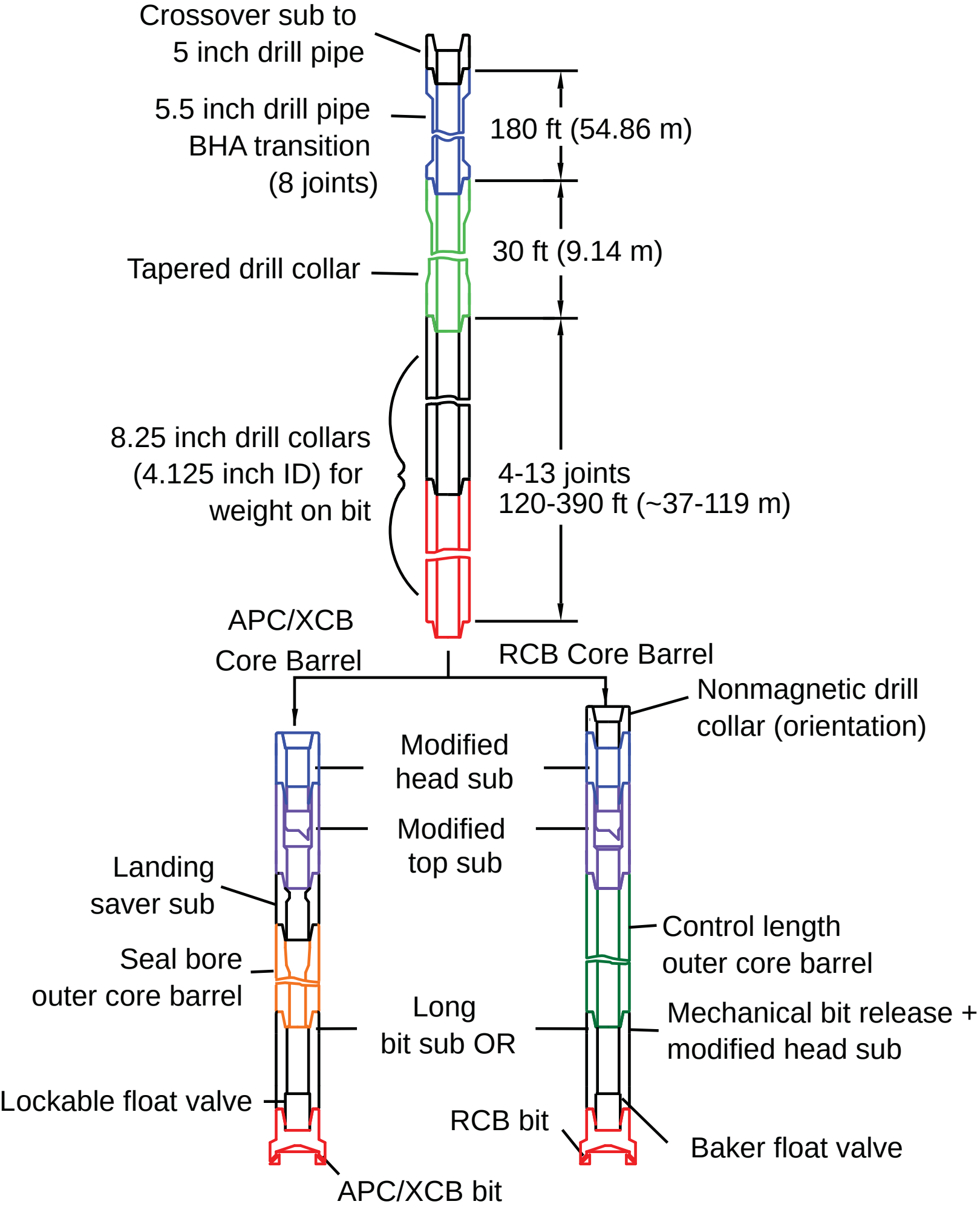
Crossover sub to
5 inch drill pipe
5.5 inch drill pipe
BHA transition
(8 joints)
180 ft (54.86 m)
Tapered drill collar
30 ft (9.14 m)
8.25 inch drill collars
(4.125 inch ID) for
weight on bit
4-13 joints
120-390 ft (~37-119 m)
APC/XCB
Core Barrel
RCB Core Barrel
Nonmagnetic drill
collar (orientation)
Modified
head sub
Modified
top sub
Landing
saver sub
Control length
outer core barrel
Seal bore
outer core barrel
Long
bit sub OR
Mechanical bit release +
modified head sub
Lockable float valve
RCB bit
Baker float valve
APC/XCB bit